ARMAPRIME
ТРУБОПРОВІДНА АРМАТУРА

AYVAZ®

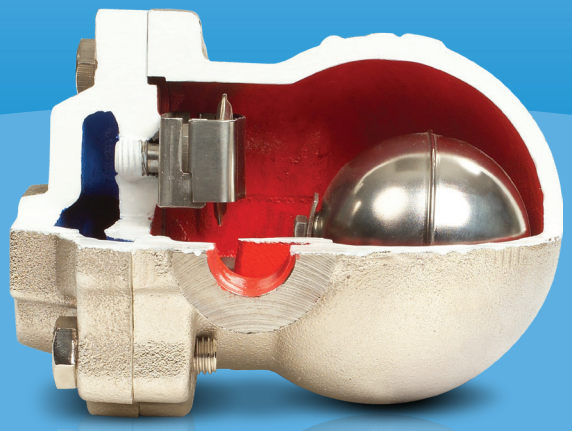

SK-61

FLOAT TYPE STEAM TRAP

GENERAL FEATURES

SK-61 Float Steam Trap is used for discharging the condensate by a mechanical float system. When the system starts up, thermostatic air vent is activated and discharges the air in the system. After this process, incoming steam will close the air vent. However when condensate reaches the steam trap, the float rises and open the main valve and discharges the condensate. As soon as the condensate discharge is completed and the steam reached into the trap, the float goes down and closes the valve. As it is designed that always some water stays on the valve system, water sealing is provided. That prevents possible steam leakages. Condensate level in SK-61 can be seen through the sight glass as optional.

Materials:
Body And Cover: AISI 316 Stainless Steel
Inner Parts: Stainless Steel

Connection:
Threaded, Flanged and Socket

Nominal Diameter:
DN15 (1/2") - DN50 (2")

Pressure:
Max. 25 bar

Working Temperature:
Max. 250 ºC

Installation:
The cover can be adjusted to fit horizontally and vertically.

Applicaton Areas:
-Heat Exchangers
-Heating Batteries
-Tanks
-Pans
-Drying Cylinders
-Pharmaceutical Industry
-Chemical Industry
-Food Industry

Connection Type	Flanged	Threaded
Diameter (mm)	15-20-25-32-40-50	1/2"- 3/4"-1"- 1 1/4"- 1 1/2"-2"
Weight (kg)	5.5-5.5-6.85-20.8-21.8-33	4.10-4.10-4.65-16.8-17.6-22

rev.0319

SK-61 FLOAT TYPE STEAM TRAP

TECHNICAL SPECIFICATIONS

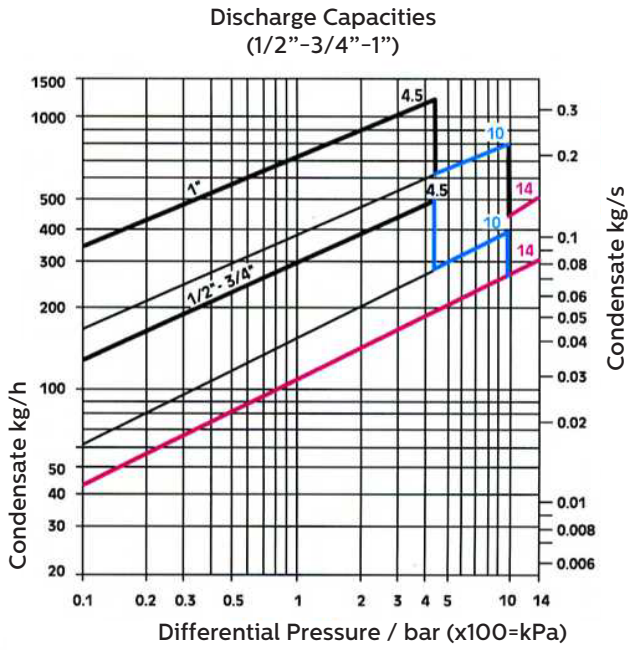

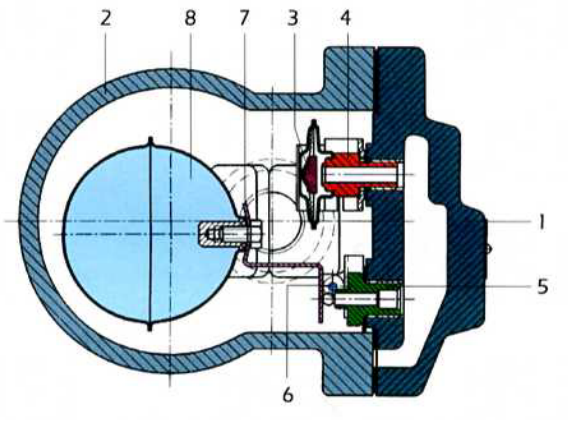

Dia.	DIMENSIONS (mm)				
	A	K	B	C	D
15	150	150	108	68	122
20	150	150	108	68	122
25	160	167	108	107	145

SPARE PARTS		
No	PART NAME	MATERIAL
1	Body	AISI316 SS
2	Cover	AISI316 SS
3	Termostatic Capsule	Stainless Steel
4	Air Vent Seat	Stainless Steel
5	Float Seat	Stainless Steel
6	Main Valve	Stainless Steel
7	Float Lever	Stainless Steel
8	Float	Stainless Steel

All dimensions are given in mm.

FLANGED CONNECTION

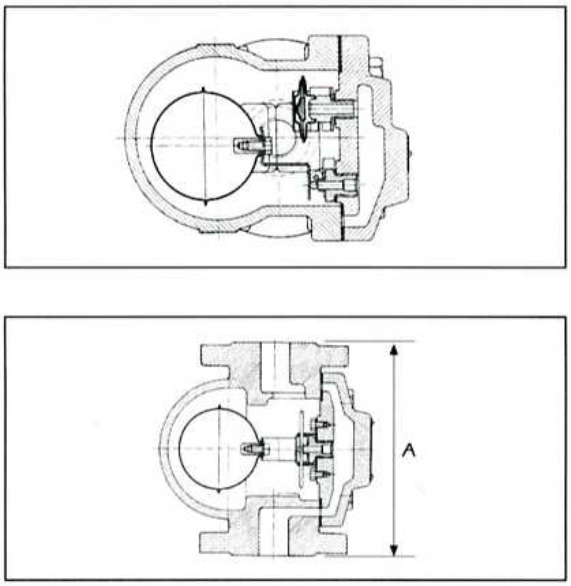

THREADED CONNECTION

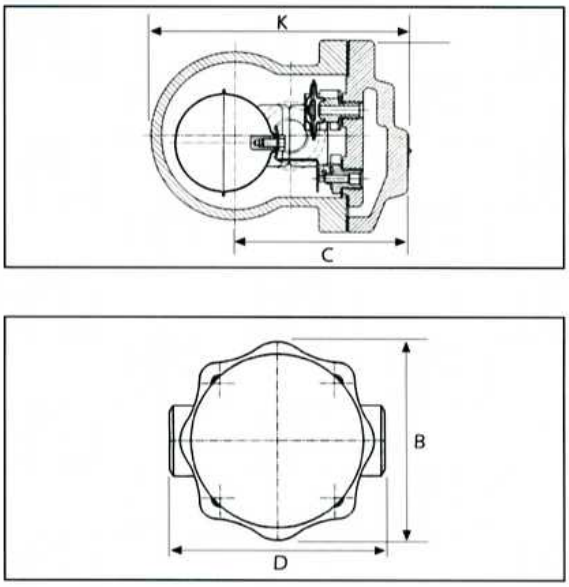

SK-61 FLOAT TYPE STEAM TRAP

11/4"-2" THREADED

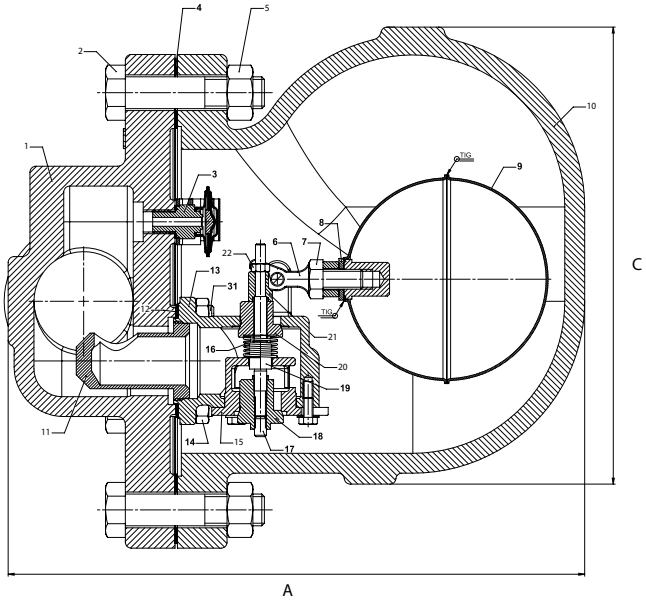

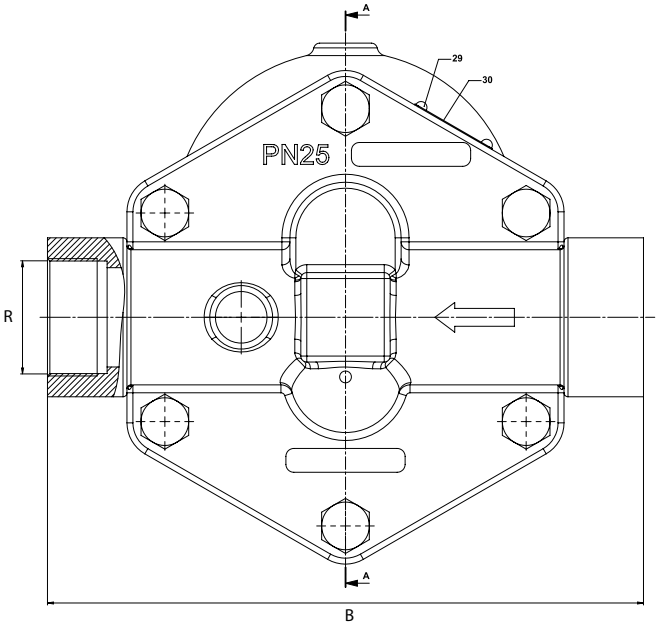

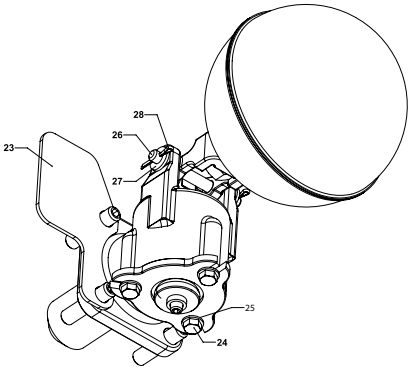

Dia.	DIMENSIONS (mm)			
	R	A	B	C
11/4"	DN32	290	300	230
11/2"	DN40	280	270	213
2"	DN50	280	270	213

SK-61 FLOAT TYPE STEAM TRAP

1 1/4"-2" FLANGED

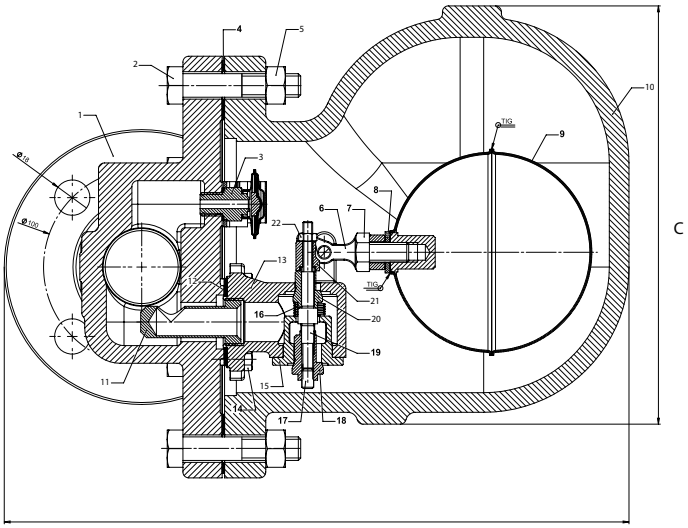

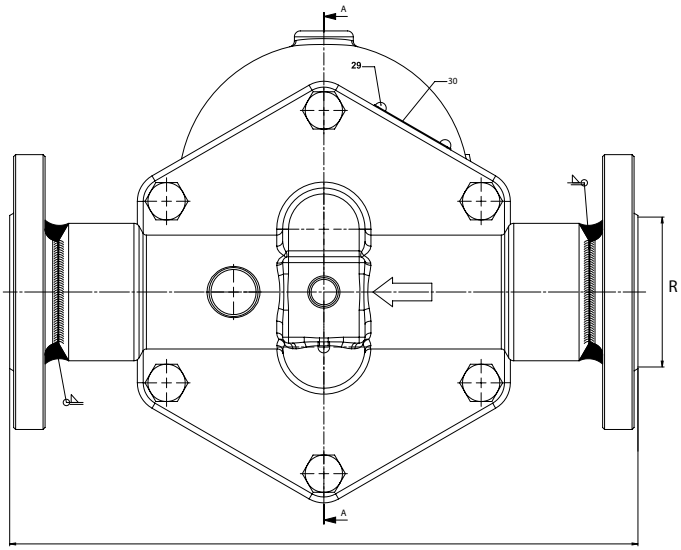

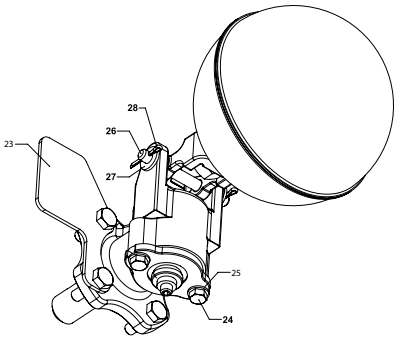

Dia.	DIMENSIONS (mm)			
	R	A	B	C
1 1/4"	DN32	318	320	213
1 1/2"	DN40	323	320	213
2"	DN50	335	320	230

AYVAZ

ARMAPRIME
ТРУБОПРОВІДНА АРМАТУРА